Pietro Fiorentini

Norval

Pressure Regulators

Norval

NORVAL pressure regulators are direct acting devices for low and medium pressure applications controlled by a diaphragm and counter spring.
These regulators are suitable for use with previously filtered, non corrosive gases.

Modular Design

The modular design of pressure regulator Norval allows application of slam shut or device for use as “in line monitor” on the same body without changing the face-to-face dimension.
Furthermore the truly “top entry design” allows an easy periodical maintenance without removing body from the line.
The features of Norval regulators make of it a product suitable for any application, the regulator can be mounted upside down.
The fast response time makes it ideal for burner or industrial applications or whenever sudden changes of flowrate are part of the process. The high accuracy against any inlet pressure variation makes of Norval an optimum product also for gas district systems, an application generally not suitable for direct acting regulators.
An extremely easy maintenance and a reduced number of parts are the background of low cost operation.

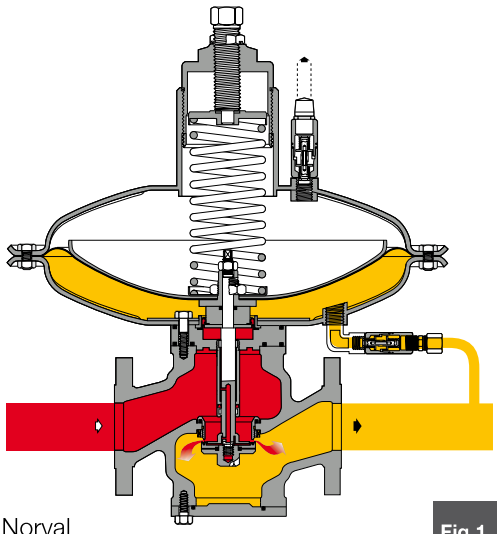

Norval

Fig.1

DESIGNED WITH YOUR NEEDS IN MIND

- COMPACT DESIGN
- EASY MAINTENANCE
- TOP ENTRY
- FAST RESPONSE TIME
- HIGH TURN DOWN RATIO
- HIGH ACCURACY
- LOW OPERATION COST
- WIDE RANGE OF APPLICATIONS

SLAM SHUT | Norval

This is a device stopping immediately gas flow (SAV) when, whatsoever downstream pressure exeeds given set-point. The device can be actuated also manually.

SN Slam shut (see figure 2) can be incorporated on the standard regulator and on the in-line monitor.
The regulator with the incorporated slam-shut has Cg coefficients equal to 93% of those of the basic regulator.
A further advantage of the incorporated slam-shut valve is that it can be retro fitted at any time on a previously installed Norval (size up to 3”only) without modifying the regulating unit.
Main features of SN slam-shut device are:
- design pressure 16 bar for all the components;
- accuracy (AG): up to ±1% of the pressure set-point for pressure increase; up to ±5% for pressure decreasing;
- internal by-pass for resetting;
- intervention for over pressure and/or under pressure;
- manual push-button control;
- possibility of pneumatic or electromagnetic remote control;
- compact overall dimensions;
- easy maintenance;
- possibility of application of devices for remote signal (contact or inductive microswitches).

NORVAL + SLAM SHUT SN | Norval

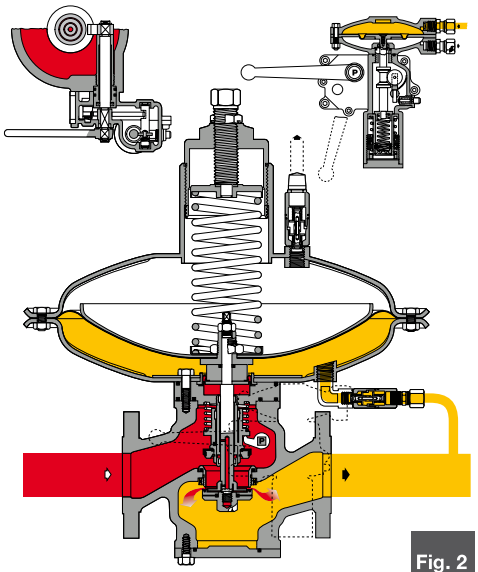

Fig. 2

IN-LINE MONITOR Norval

The monitor is an emergency regulator which comes into operation in place of the main regulator if, in the event of failure, the latter allows the downstream pressure to reach the monitor set-point.

Operation of the Norval functioning as Monitor

NORVAL functioning as an in-line monitor is a regulator which, in addition to the standard version, has a further mobile assembly balancing device (ER) guaranteeing greater accuracy of regulated pressure and therefore an equally precise value for the intervention pressure without risk of interference with main regulator (see figure 3). This device can be retro fitted on a standard existing regulator.

MONITOR DEVICE ER Norval

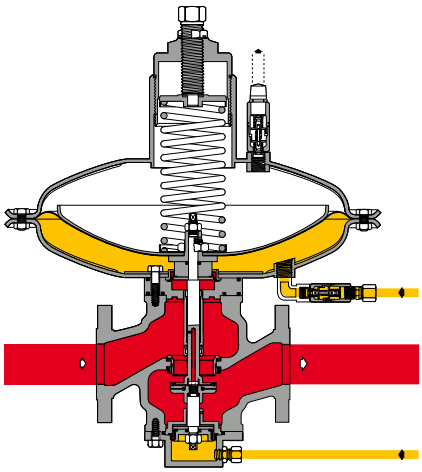

Fig. 3

MAIN FEATURES Norval

> Design pressure: up to 19 bar (275 Psig)
> Design temperature: -20 °C to +60 °C (-4 to + 140 °F)
> Ambient temperature: -20 °C to +60 °C (-4 to + 140 °F)
> Max inlet pressure Pumax: Size 1”to 3” 16 bar (232 Psig) Size 4” to 8” 8 bar (116 Psig)
> Outlet pressure range of Wh: Size 1” to 4” 8 to 4400 mbar (3”w.c. to 63,8 Psig)
Size 6” to 8” 12 to 1800 mbar (5”w.c. to 26,1 Psig)
> Accuracy class AC: up to 5
> Closing pressure class SG: up to 10
> Available size DN: 1” - 1”1/2 - 2” - 2”1/2 - 3” - 4”- 6”- 8”
> Flanging: class 150 RF according to ANSI B16.5 and PN16 according to ISO 7005.

MATERIALS — Norval

Body	Spheroidal ductile iron GS 400-18 ISO 1083 for Size ≤ 6” Cast steel ASTM A216 WCB for all sizes
Head covers	Drop-forged carbon steel
Diaphgram	Rubberized canvas
Valve seat	Stainless steel
Seals	Nitril rubber
Compression fittings	According to DIN 2353 in zinc-plated carbon steel

The characteristics listed above are referred to standard products. Special characteristics and materials for specific applications may be supplied upon request.

Coefficient — Norval

Nominal diameter (mm)	25	40	50	65	80	100	150	200
Size (inches)	1”	1”1/2	2”	2”1/2	3”	4”	6”	8”
Cg coefficient	331	848	1360	2240	3395	5100	10600	16600
KG coefficient	348	892	1430	2356	3571	5365	11151	17463
K1 coefficient	106,78	106,78	106,78	106,78	106,78	106,78	106,78	106,78

For sizing formula refer to www.fiorentini.com/sizing
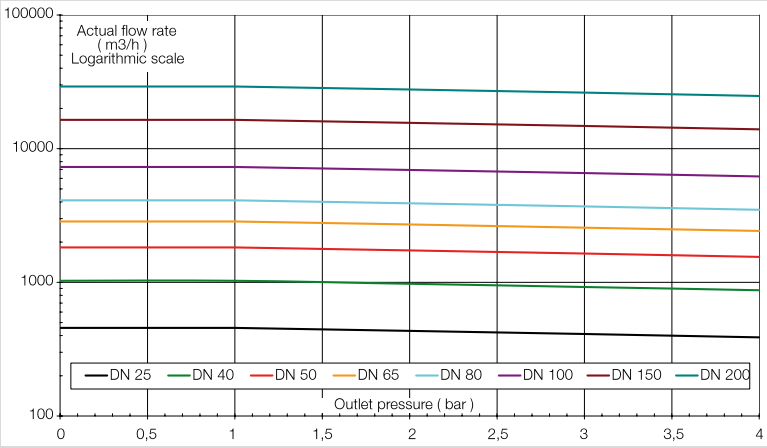
CAUTION:
The graph gives a quick reference of maximum recommended regulator capacity depending on selected size. Values are expressed in actual m3/h of Natural gas (s.g. 0,6): to have the data directly in Nm3/h it is necessary to multiply the value by the outlet pressure value in bar – absolute.